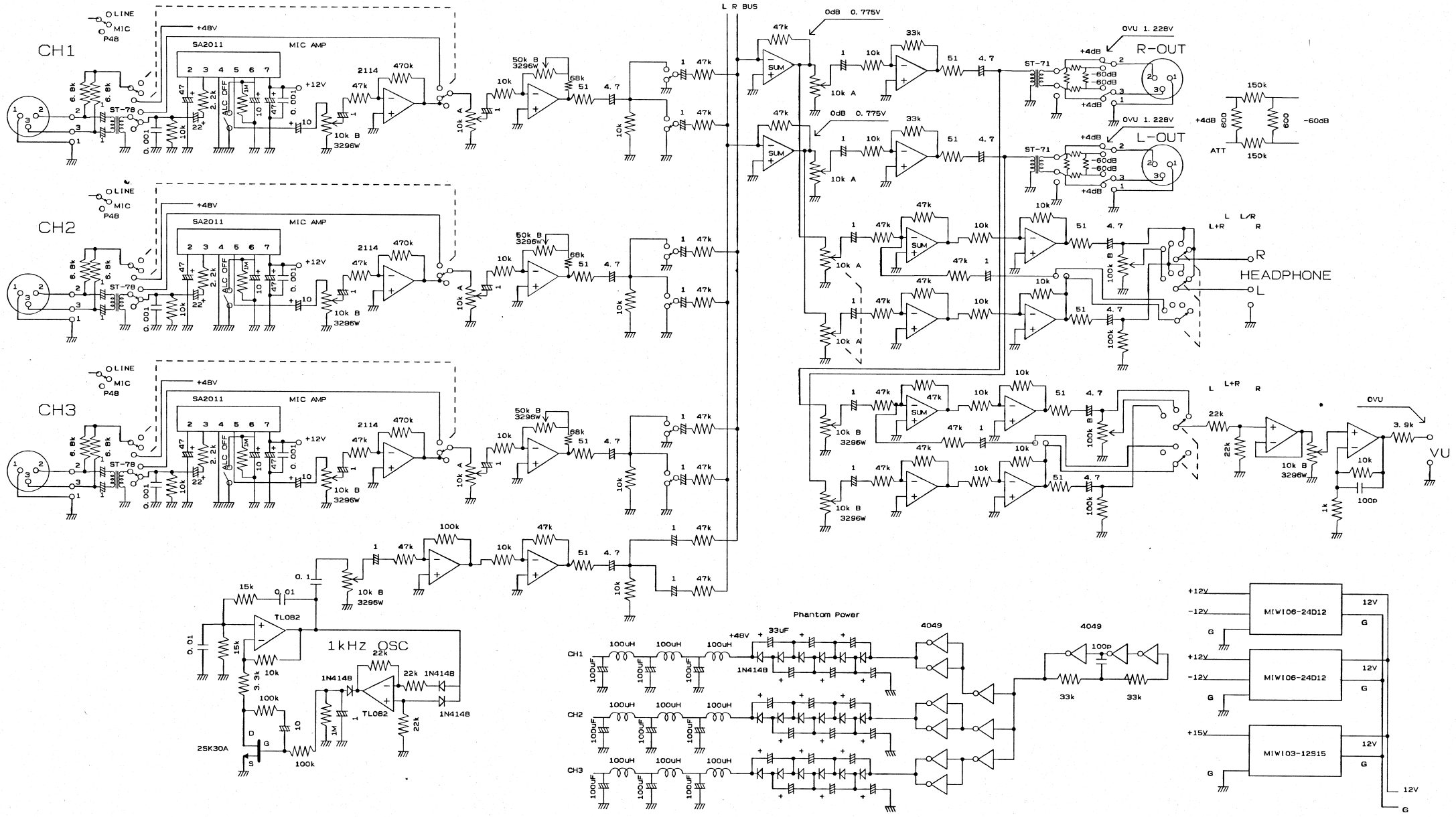
CH1
CH2
CH3
LINE
MIC
P48
+48V
SA2011
MIC AMP
ST-78
ALC OFF
2114
470k
47k
10k B
3296W
50k B
3296W
68k
51
4.7
10k
10k A
L R BUS
0dB 0.775V
SUM
33k
OVU 1.228V
R-OUT
L-OUT
ST-71
+4dB
-60dB
150k
600
ATT
HEADPHONE
R
L
L+R
L/R
OVU
VU
3.9k
22k
100p
1k
100k
TL082
1kHz OSC
1N4148
2SK30A
Phantom Power
4049
33uF
100uH
100uF
MIWI06-24D12
MIWI03-12S15
+12V
-12V
+15V
12V
G