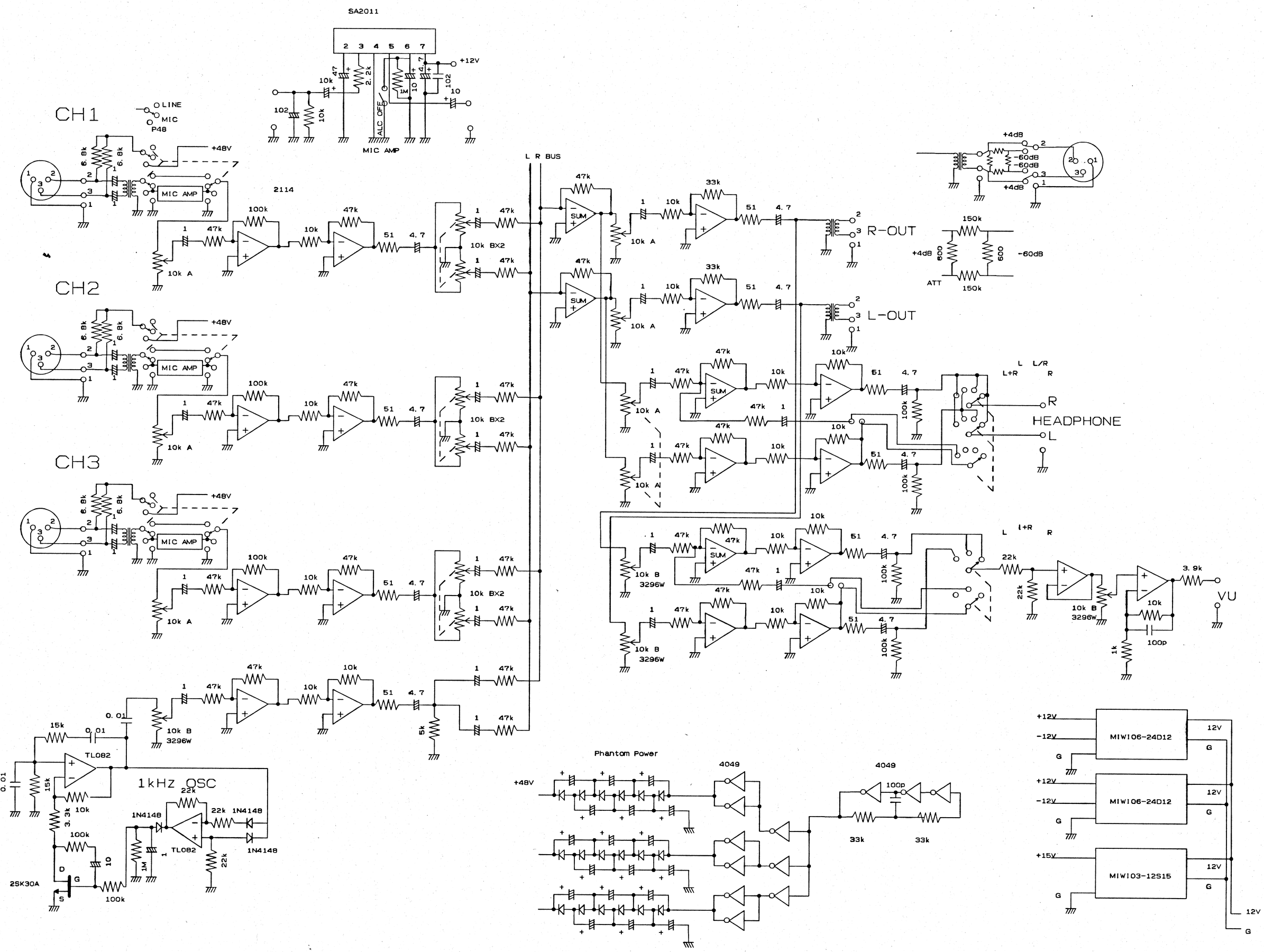
SA2011
MIC AMP
ALC OFF
+12V
CH1
CH2
CH3
LINE
MIC
P48
+48V
MIC AMP
2114
L R BUS
SUM
10k A
10k BX2
R-OUT
L-OUT
+4dB
-60dB
ATT
L L/R
L+R R
HEADPHONE
VU
10k B
3296W
1kHz OSC
TL082
2SK30A
1N4148
Phantom Power
4049
MIWI06-24D12
MIWI03-12S15
12V
G